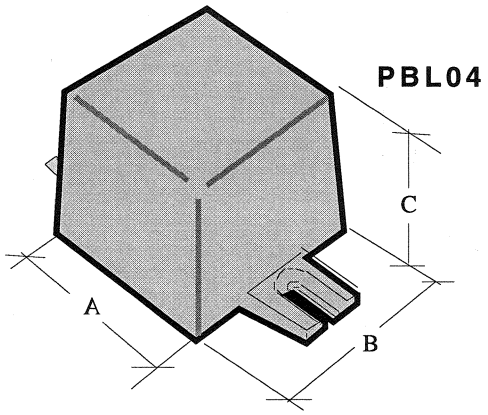

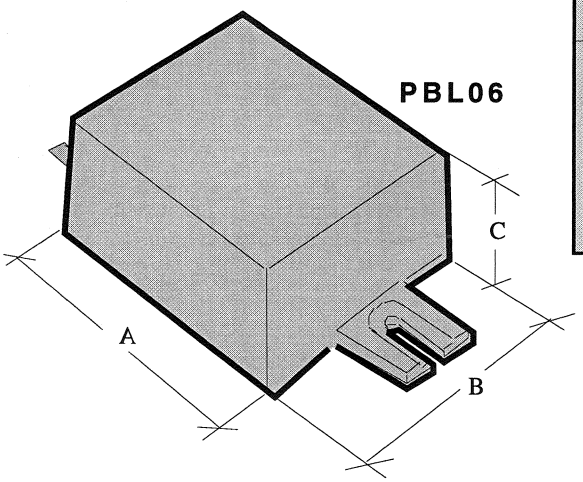

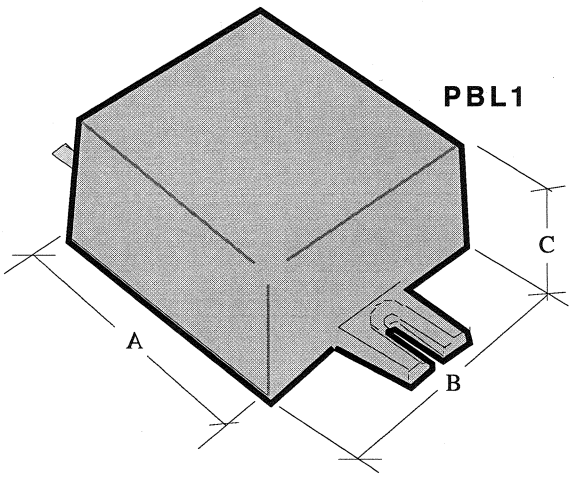

GENERAL PURPOSE BOXES WITH BASE AND SLOTTED MOUNTING LUGS

A range of 3 low cost general purpose boxes moulded in black ABS for housing small electronic circuits.
They can be easily punched or drilled for individual requirements.
The base is intended as an interference fit but could be glued to provide a secure housing. The slotted fixing lugs allow the finished product to be fixed in place with an allowance for misalignment.
Designed for automobile applications yet versatile enough for a variety of projects.

Part No.	Overall Dimensions mm			Nominal Wall Thickness
	A	B	C	
PBL04	42	42	40	2.5
PBL06	66	50	34	2.5
PBL1	58	58	31	2.5

130197

All dimensions are external and in mm.