MOTERIAL

Hood: ABS UL 94HB
Color Black or Metalized
Screw: Steel with Nickel plated
Cabie Clippar: Steel with Nicker plated

993–6 2– 01 25 x 1
1 2 3 4 5 6

1. 1: 1 Series Normal parts
   6: 1 Series Green Product
   A: 1 Series 94–VO Normal parts
   B: 1 Series 94–VO Green Product
2. 1: Bullk CS
   2: Bag CY
3. 01: 101 Series
4. 25: 25 Pin
5. 0: Black Insulator
   1: Gray Insulator
   2: Chromate
   6: Beige Insulator
6. Pinrex internal code.

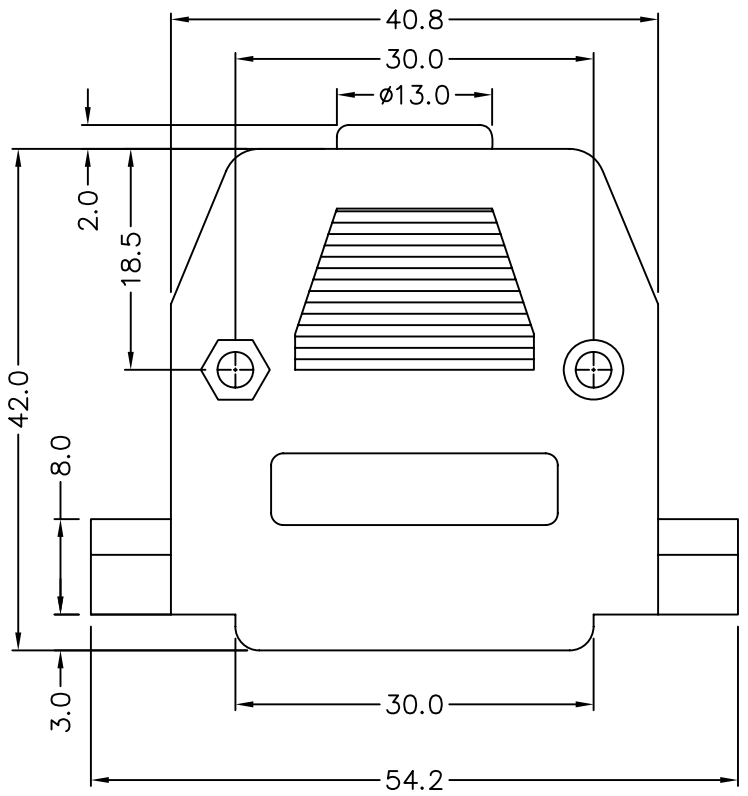

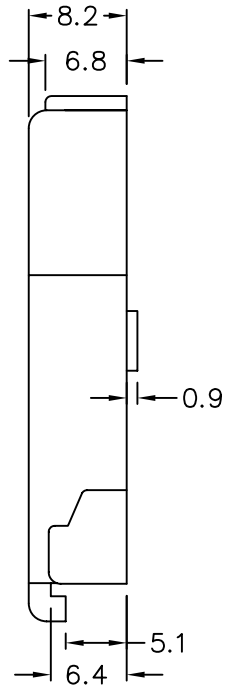

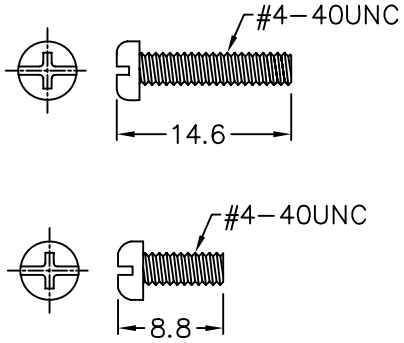

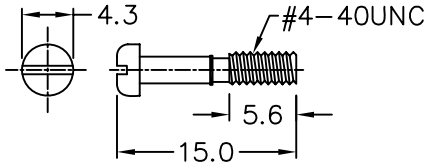

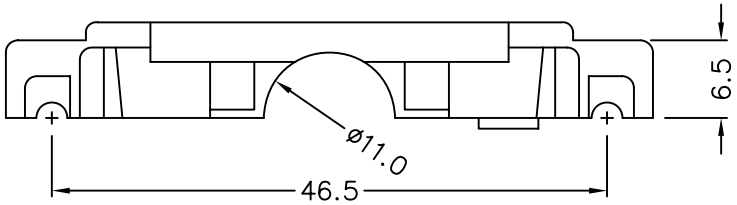

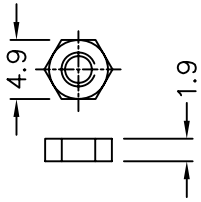

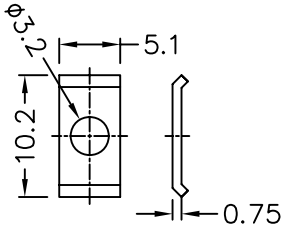

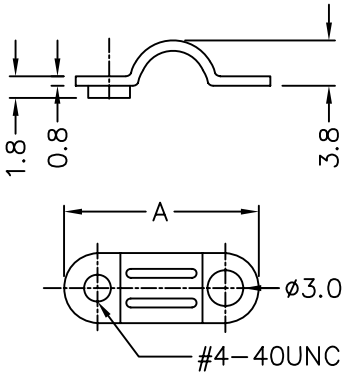

Position	09	15	23	25	37	50
A	16.2	19.4	26.5	26.5	26.5	30.4

REV.	DESCRIPTION	DATE
A	RELEASE	2007/08/24

TOLERANCE
.0 =±.30
.00 =±.20
.000 =±.XXX
.0000=±.
ANG.=±3°

UNITS : mm

SCALE NONE | SIZE A4

OLD PART NO.

DRAWER Naomi | CHECK

SHEET 1 OF 1 | REV. A | APP'D

TITLE D–SUB HOOD 101 SERIES 25P

NEW PART NO. 993–62–0125x1

頻銳科技股份有限公司
PINREX TECHNOLOGY CORP.

DRAW NO. 993–62–0125x1